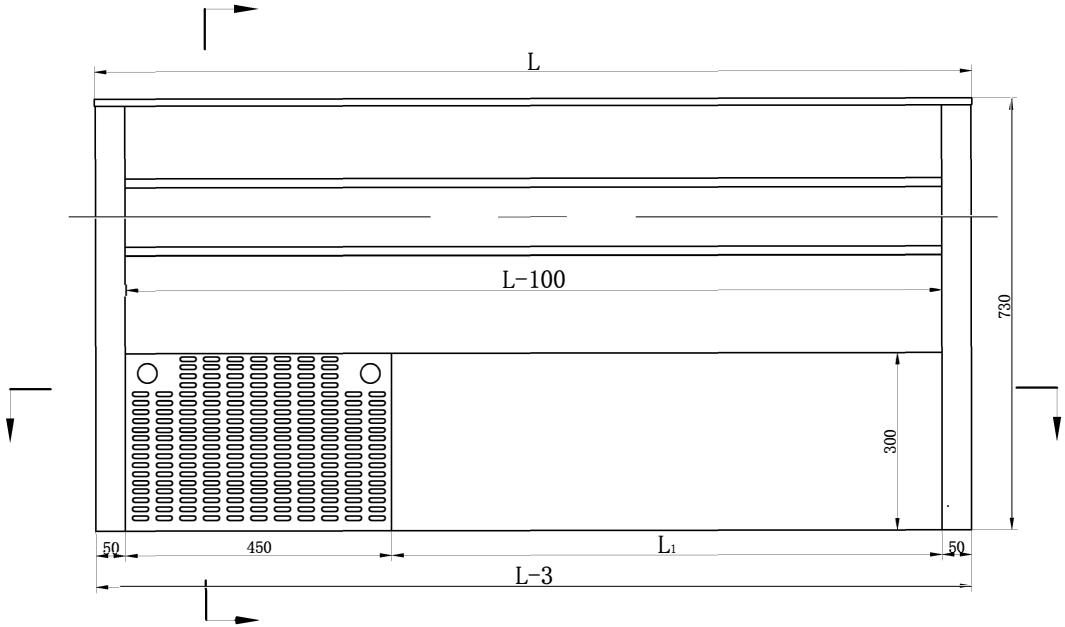

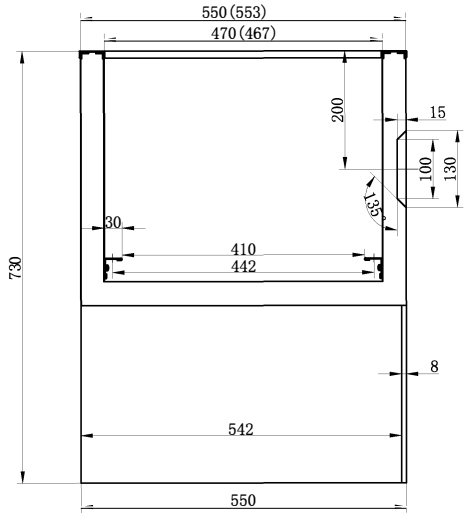

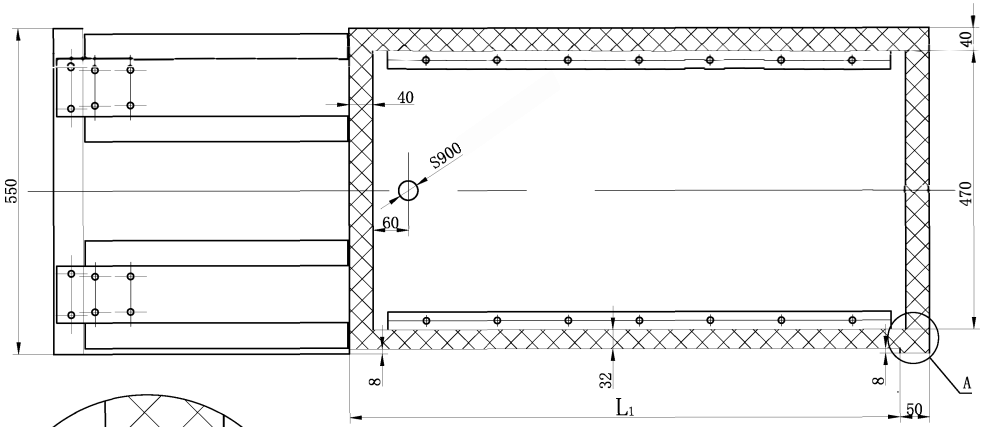

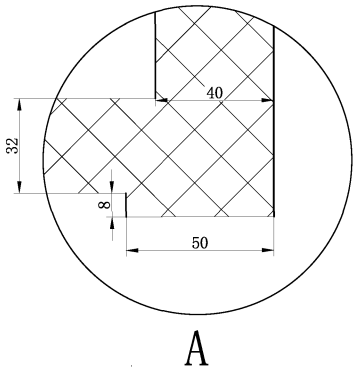

Model	L	L_1	
BHC150X1	1483	930	
BHC200X1	1983	1430	
BHC250X1	2483	1930	

TEFCOLD®